Data Quality Analysis and Revalidating the Pipelines

Robert Lupton
LSST Pipeline Scientist

2017-01-25

LSST2016 PROJECT AND COMMUNITY WORKSHOP
AUGUST 15-19, 2016 | TUCSON, ARIZONA

Overview

LSST DM construction has two tasks:

- build the pipelines
- Commission the pipelines with the real telescope and camera

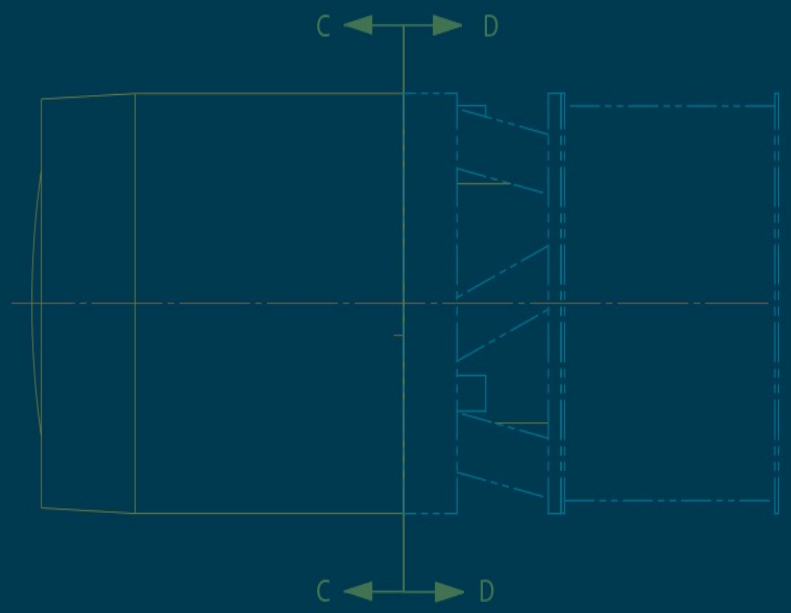

Overview

LSST DM construction has two tasks:

- build the pipelines
- Commission the pipelines with the real telescope and camera
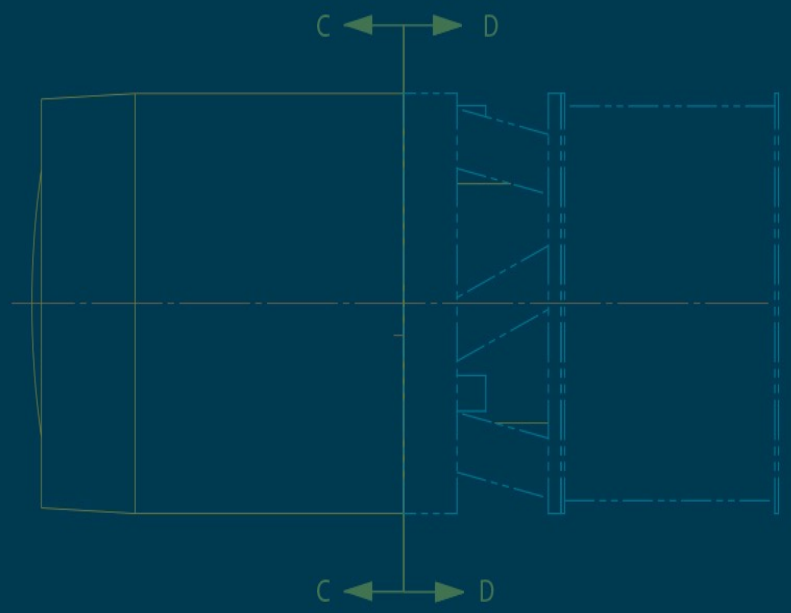
Fortunately *validating* and *commissioning* are very similar tasks.